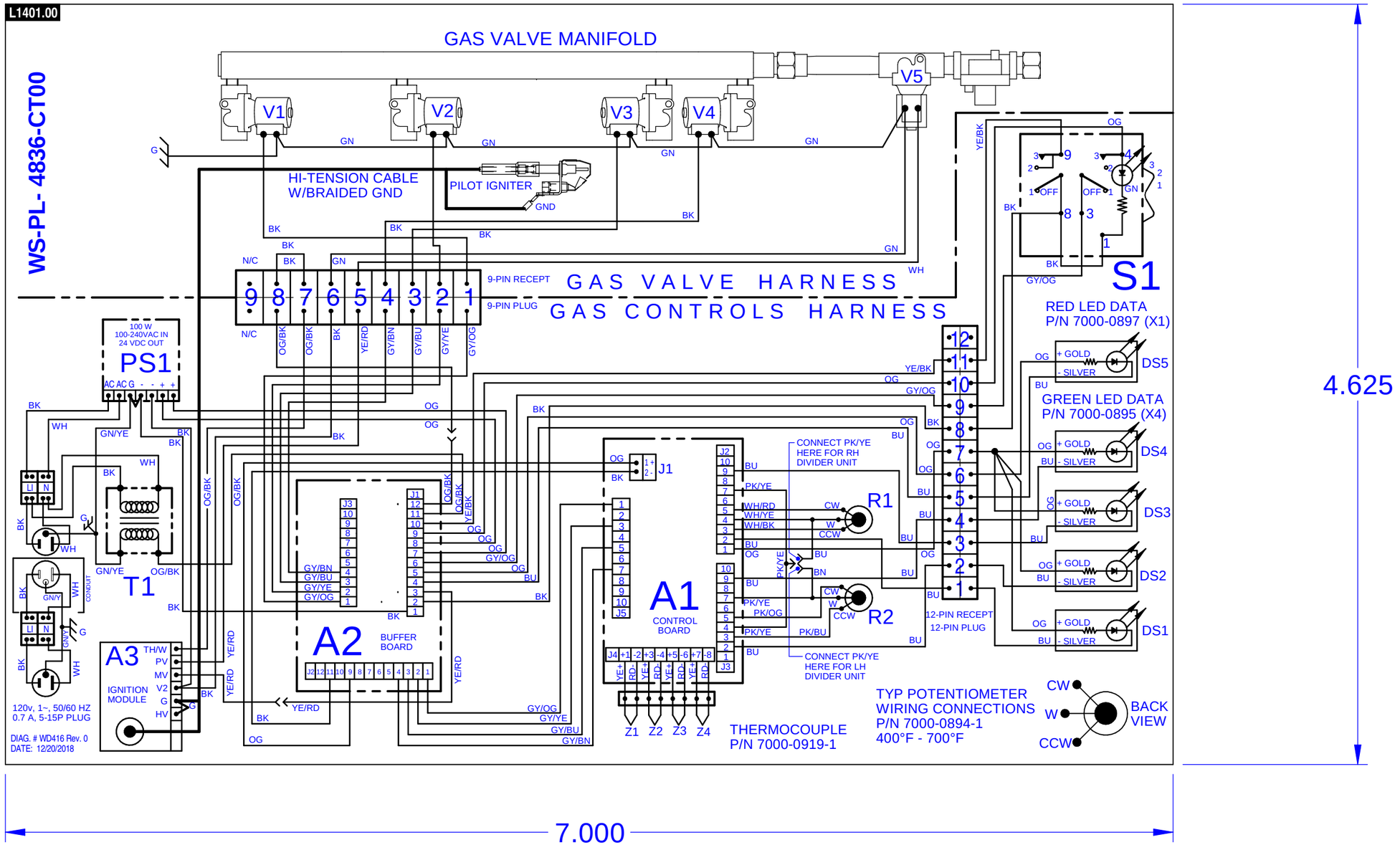

THE INFORMATION CONTAINED IN THIS DRAWING IS THE SOLE PROPERTY OF WOOD STONE CORPORATION
ANY REPRODUCTION OR USE IN PART OR AS A WHOLE WITHOUT THE WRITTEN PERMISSION OF WOOD STONE IS PROHIBITED

SHEET: 1 of 1		REV: .00
DWN BY: davidz		
PART #: L1401		
DATE: 1/21/2019	PROJ #: 4823	

Wood Stone
1801 West Bakerview Road, Bellingham, WA 98226 360/650-1111

PL4836
Single-Sheet Wiring Diagram - Hidden Knob - 2-Pole T/Blk